Emco Dynatorq

Title: ELECTROMAGNETIC CLUTCH

TYPE - 41.105 Design 3.1, 3.3, 3.5 (Normally Off)

Reference: –

DIMENSIONS

Design 3.1

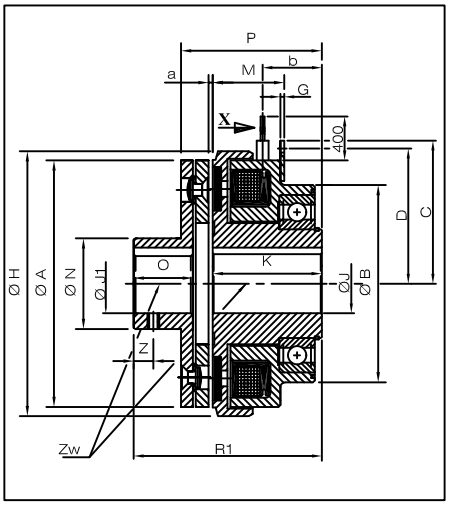

Design 3.3

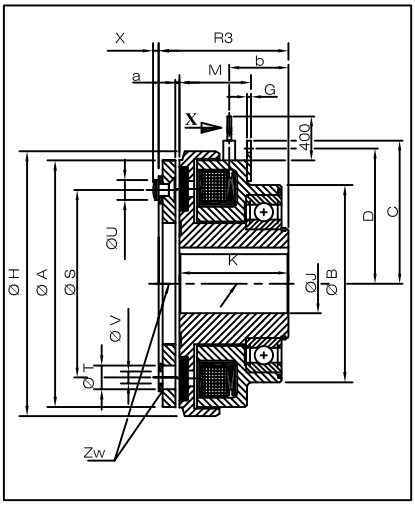

Design 3.5

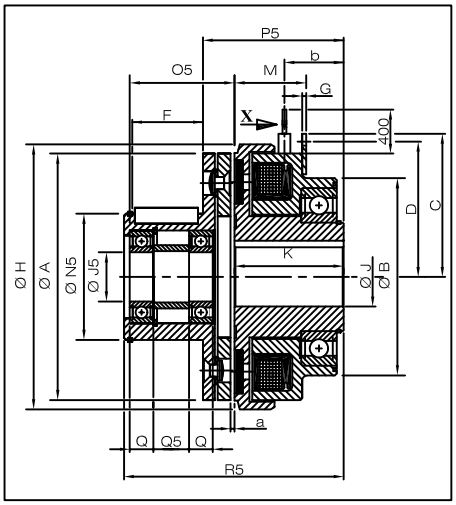

Tapped holes shown on dimension `Z`on request.

PARAMETERS

Size		06	08	10	12	16	20	25
Torque	Ms [Nm]	7.5	15	30	60	120	240	480
Max. Speed	[min^{-1}]	8000	6000	5000	4000	3000	3000	2000
Input Power	P 20 [w]	15	20	28	35	50	68	85
Inertia [kg cm^2] Rotor		1.33	2.94	8.66	24.6	69	215	566
Inertia [kg cm^2] Armature	1	0.6	1.71	6.64	18	63.3	190	480
	3	0.42	1.18	4.72	13	48	137	358
	5	0.92	2.82	9.2	25.8	86.8	258	720
Permissible misalignment	Zw [mm]	0.05	0.05	0.05	0.05	0.1	0.1	0.1
	ØA	63	80	100	125	160	200	250
	ØB	64	68	85	100	127	151.5	152.4
	C	41	50	61	72.5	99	119	145
	D	37	46	57	68.5	93	113	139
	E	4.1	4.1	4.1	4.1	8.1	8.1	8.1
	E_1	10	12	14	14	20	20	20
	F	17	22	27	36.5	44.4	53.4	63.5
	G	1.5	1.5	2.5	2.5	3.5	3.5	3.5
	ØH	68	85.5	107	134.3	170	214.3	266.5
	K	40	43.5	49	55	61.5	74	81
	M	26	28	32.5	36	41.7	48.1	55.2
	ØN	27	32	42	49	65	83	105
	$ØN_5K_6$	38	45	55	64	75	90	115
	O	15	20	25	30	38	48	55
	O_5	22.7	32.2	39.4	51.5	63	77.9	91.9
	P	47.5	52	60	68	77.5	94.4	105
	P_5	47	52	60	68	77.5	95.4	105
	Q	8	9	12	12	13	15	19
	Q_5	4	5.5	6.5	18	28	34	38
	R_1	59	68	80	92	108.5	133.5	149
	R_3	44	48	54.9	62	70.5	85.4	93.9
	R_5	67	77	90	108.5	127.5	155.4	175
	ØS	46	60	76	95	120	158	210
	ØT	6.3 x 3	8 x 3	10.5 x 3	12 x 3	15 x 3	18 x 3	22 x 4
	ØU	5.5 x 3	7 x 3	9 x 3	10 x 3	13 x 3	16 x 3	20 x 4
	ØV	3.1 x 3	4.1 x 3	5.15 x 3	6.1 x 3	8.2 x 3	10.2 x 3	12.2 x 4
	X	1.4	1.7	2.1	2.5	3	4	4.3
	Z	5	6	6	10	10	15	20
	a	0.2	0.2	0.2	0.3	0.3	0.5	0.5
	b	22	24	27.5	29.5	35	42.5	45.5
	$ØJ^{H7}$ **	10,15	17,20	20,25,30	20,25,30	25,30,40	40,45,50	40,45,50
	$ØJ^{H7}$ ***	20	25	30	40	50	60	60
	$ØJ_1^{H7}$ *	10	10	14	14	20	25	25
	$ØJ_1^{H7}$ **	10,12,15	14,17,20	20,25,28	25,28,30	30,35,40	40,45,50	40,50,60
	$ØJ_1^{H7}$ ***	17	20	30	35	45	60	80
	$ØJ_5^{H7}$	12	15	20	25	30	40	45

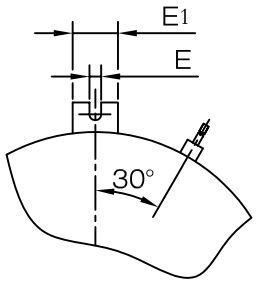

View `X'

* Pilot bore, no keyway $ØJ_1$
** Standard bores
*** max. bores

IMPORTANT : 1 Nm = 0.102 kgm = 0.737 lb. ft.
Standard voltages: 24 V.D.C.; 96 V.D.C.; 190 V.D.C.
Other voltages on request.
Ms: Dynamic Torque

All dimensions are in mm
keyways to DIN 6885/ IS : 2048
P : Coil power at 20° C in W

Drawn	Nutan	Drg.No. L3. 102
Appr.		
Date		Sheet 1 Of 1

THIS DOCUMENT IS THE PROPERTY OF EMCO DYNATORQ PVT. LTD. UNAUTHORISED DISCLOSURE TO ANY THIRD PARTY OR DUPLICATION IS NOT PERMITTED