Emco Dynatorq

Title: ELECTROMAGNETIC CLUTCH

TYPE - 41.105 Design 1.1, 1.3, 1.5 (Normally Off)

Reference: –

DIMENSIONS

Design 1.1

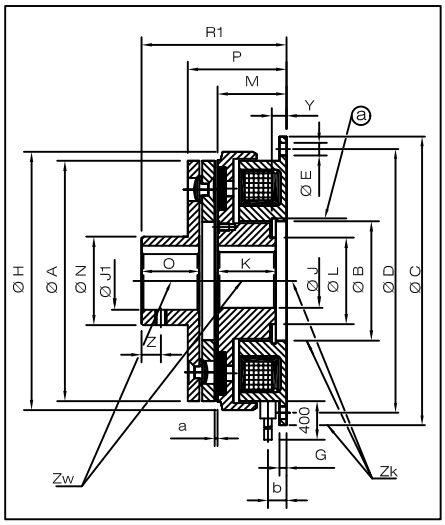

Design 1.3

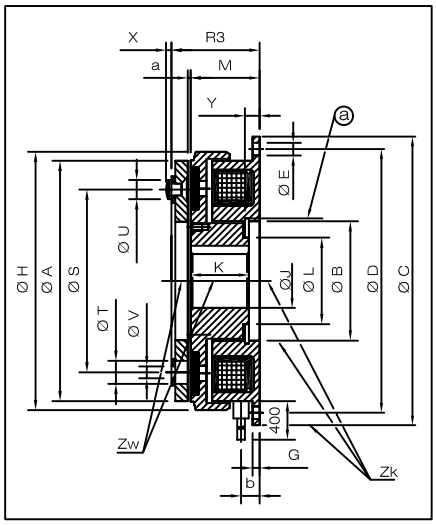

Design 1.5

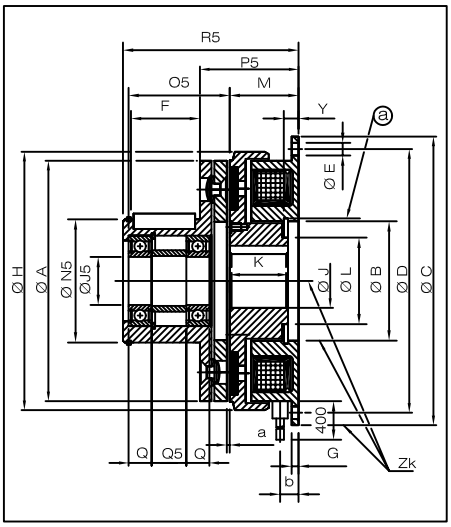

Tapped holes shown on dimension `Z`on request.

PARAMETERS

Size			06	08	10	12	16	20	25
Torque		Ms [Nm]	7.5	15	30	60	120	240	480
Max. Speed		[min^{-1}]	8000	6000	5000	4000	3000	3000	2000
Input Power		P 20 [w]	15	20	28	35	50	68	85
Inertia [kg cm^2]	Rotor		1.19	2.66	7.8	22.6	63	205	547
	Armature	1	0.6	1.71	6.64	18	63.3	190	480
		3	0.42	1.18	4.72	13	48	137	358
		5	0.92	2.82	9.2	25.8	86.8	258	720
Permissible misalignment		Zw [mm]	0.05	0.05	0.05	0.05	0.1	0.1	0.1
		Zk [mm]	0.1	0.15	0.15	0.15	0.2	0.2	0.25
		ØA	63	80	100	125	160	200	250
		ØB$_{H8}$	35	42	52	62	80	100	125
		ØC$_{h9}$	80	100	125	150	190	230	290
		ØD	72	90	112	137	175	215	270
		ØE	4.5 x 4	5.5 x 4	6.6 x 4	6.6 x 4	9 x 4	9 x 4	11 x 4
		F	17	22	27	36.5	44.4	53.4	83.5
		G	2	2.5	3	3.5	4	5	6
		ØH	68	85.5	107	134.3	170	214.3	266.5
		ØJ_5	12	15	20	25	30	40	45
		K	22	24	27	30	34	40	47
		ØL	23	28.5	40	45	62	77	100
		M	24	26.5	30	33.5	37.5	44	51
		ØN	27	32	42	49	65	83	105
		ØN_{5K6}	38	45	55	64	75	90	115
		O	15	20	25	30	38	48	55
		O_5	22.7	32.2	39.4	51.5	63	77.9	91.9
		P	31.5	35	40.9	46.5	53.5	64.4	74.9
		P_5	31	35	40.9	46.5	53.5	65.4	74.9
		Q	8	9	12	12	13	15	19
		Q_5	4	5.5	6.5	18	28	34	38
		R_1	43	51	60.9	70.5	84.5	103.4	118.9
		R_3	28	31	35.9	40.5	46.5	55.4	63.9
		R_5	51	60	70.9	87	103.5	125.4	144.9
		ØS	46	60	76	95	120	158	210
		ØT	6.3 x 3	8 x 3	10.5 x 3	12 x 3	15 x 3	18 x 3	22 x 4
		ØU	5.5 x 3	7 x 3	9 x 3	10 x 3	13 x 3	16 x 3	20 x 4
		ØV	3.1 x 3	4.1 x 3	5.15 x 3	6.1 x 3	8.2 x 3	10.2 x 3	12.2 x 4
		X	1.4	1.7	2.1	2.5	3	4	4.3
		Y	3.5	4.3	5	5.5	6	7	8
		Z	5	6	6	10	10	15	20
		a	0.2	0.2	0.2	0.3	0.3	0.5	0.5
		b	5.7	6.5	7.9	7.1	9.1	12.4	14.9
		ØJ^{H7} *	10	10	14	14	20	25	25
		ØJ^{H7} **	11,14,15	14,19,20	19,24,28	24,34,38	28,38,42	38,42,48(*)	50,60,70
		ØJ^{H7} ***	17	22	30	40	50	65	80
		ØJ_1^{H7} *	10	10	14	14	20	25	25
		ØJ_1^{H7} **	11,12,14	14,17,19	19,24,28	25,28,34	28,34,38	38,42,48(*)	40,50,60
		ØJ_1^{H7} ***	17	20	30	35	45	60	80

* Pilot bore, no keyway
** Standard bores
*** max. bores

IMPORTANT : 1 Nm = 0.102 kgm = 0.737 lb. ft.
Standard voltages: 24 V.D.C.; 96 V.D.C.; 190 V.D.C.
Other voltages on request.
Ms: Dynamic Torque

All dimensions are in mm
keyways to DIN 6885/ IS:2048
(*) J : 55 & 60 J$_1$: 55
ⓐ Circlip grooves to DIN 476/IS:3075 (Part 2)
P : Coil power at 20° C in W

Drawn	Nutan	Drg.No. L3. 100
Appr.		
Date		Sheet 1 Of 1

THIS DOCUMENT IS THE PROPERTY OF EMCO DYNATORQ PVT. LTD. UNAUTHORISED DISCLOSURE TO ANY THIRD PARTY OR DUPLICATION IS NOT PERMITTED